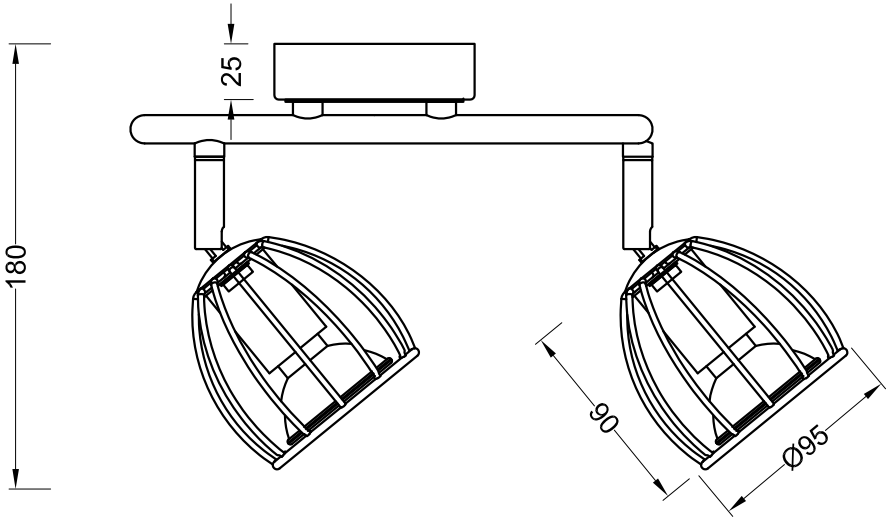

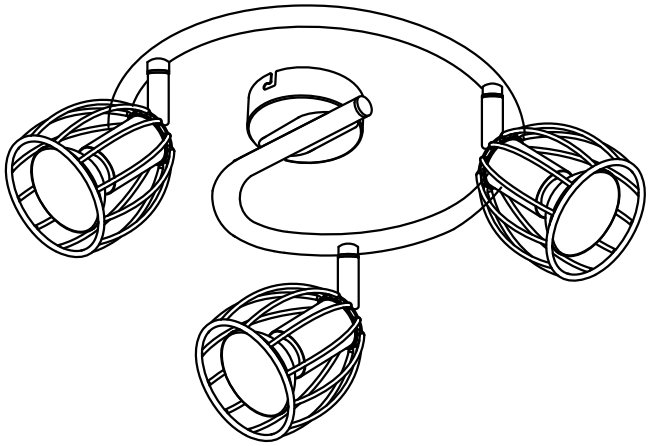

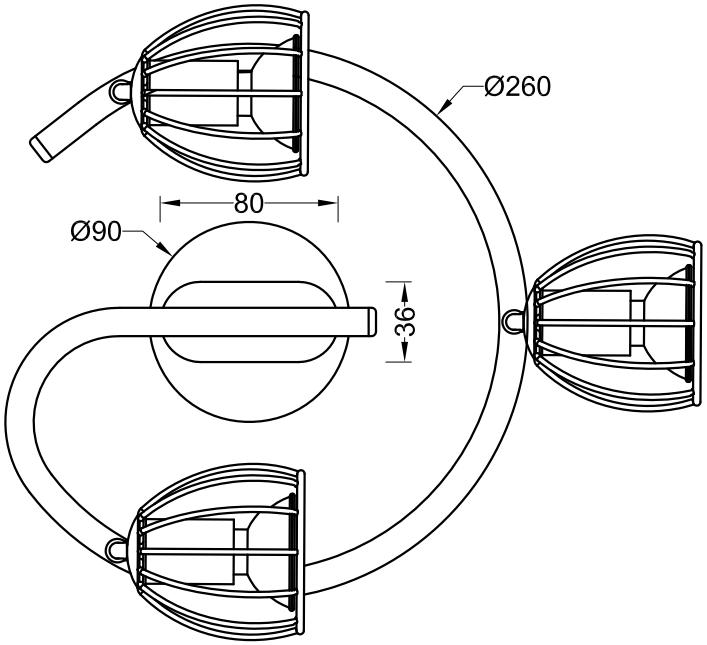

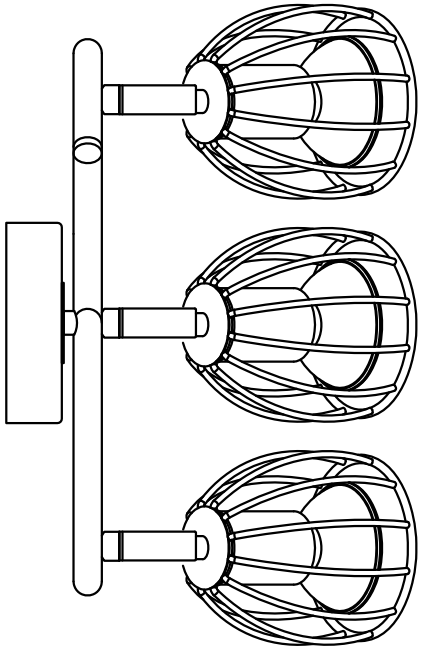

R800339XX